SECTION 4
DIAGRAMS
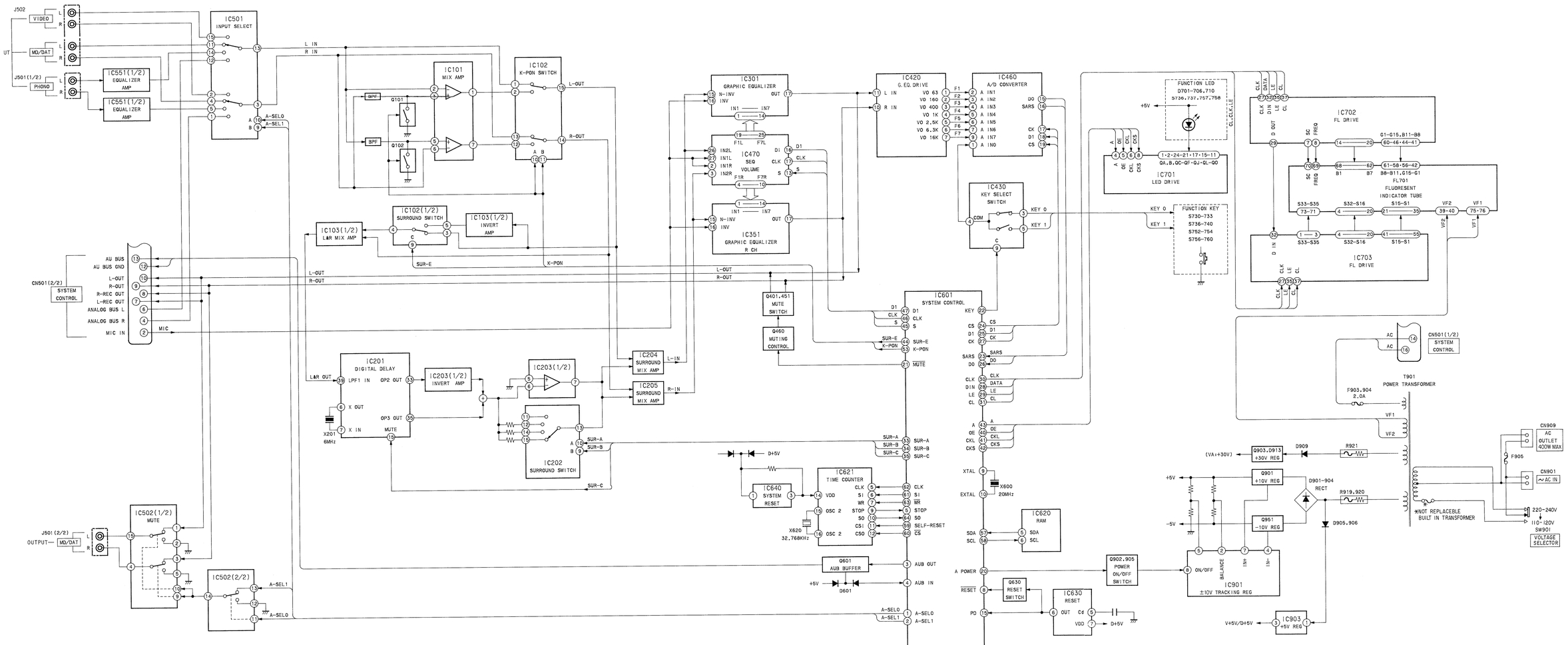
4-1. BLOCK DIAGRAM