10. Circuit Diagrams and PWB Layouts
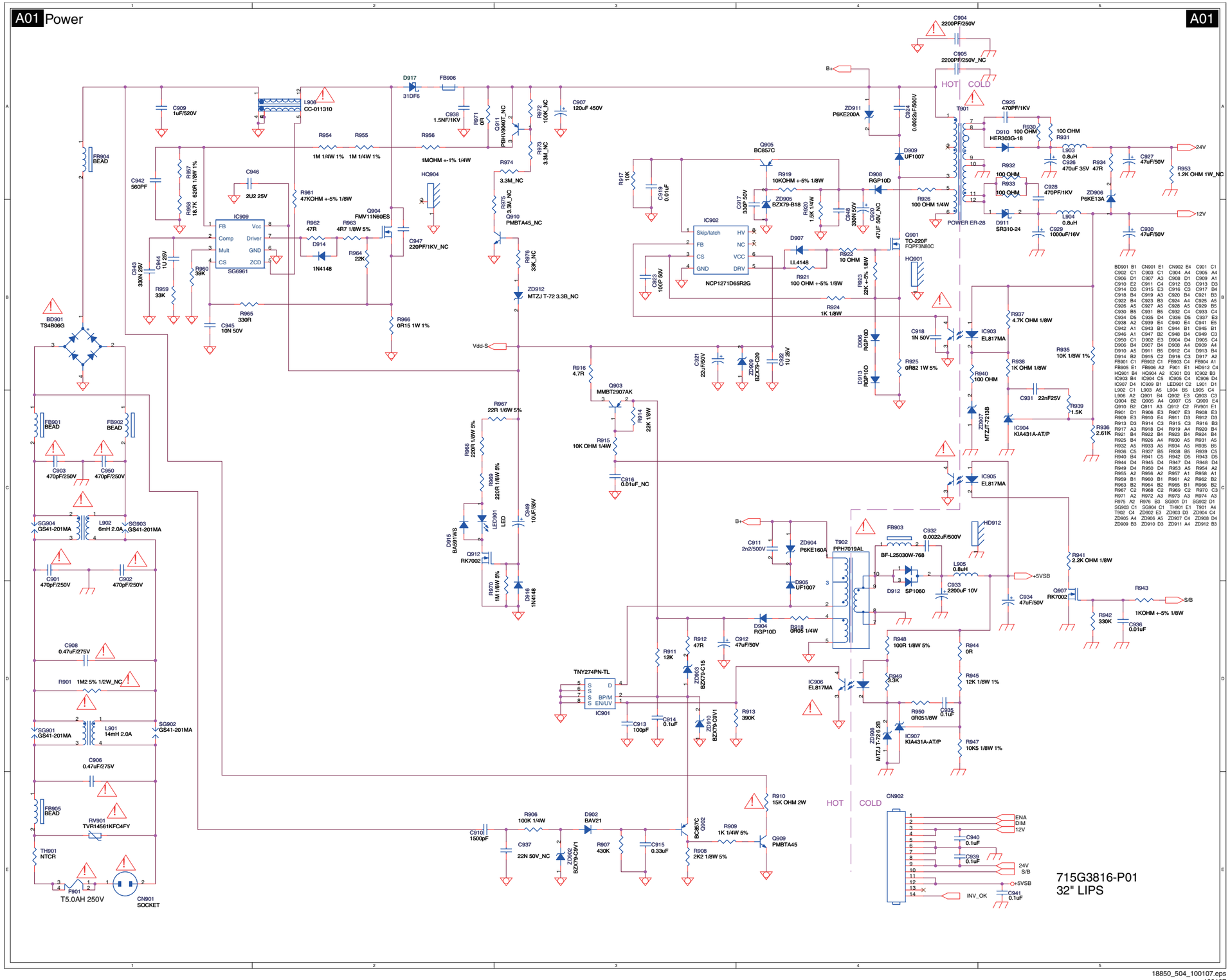
Power 32"